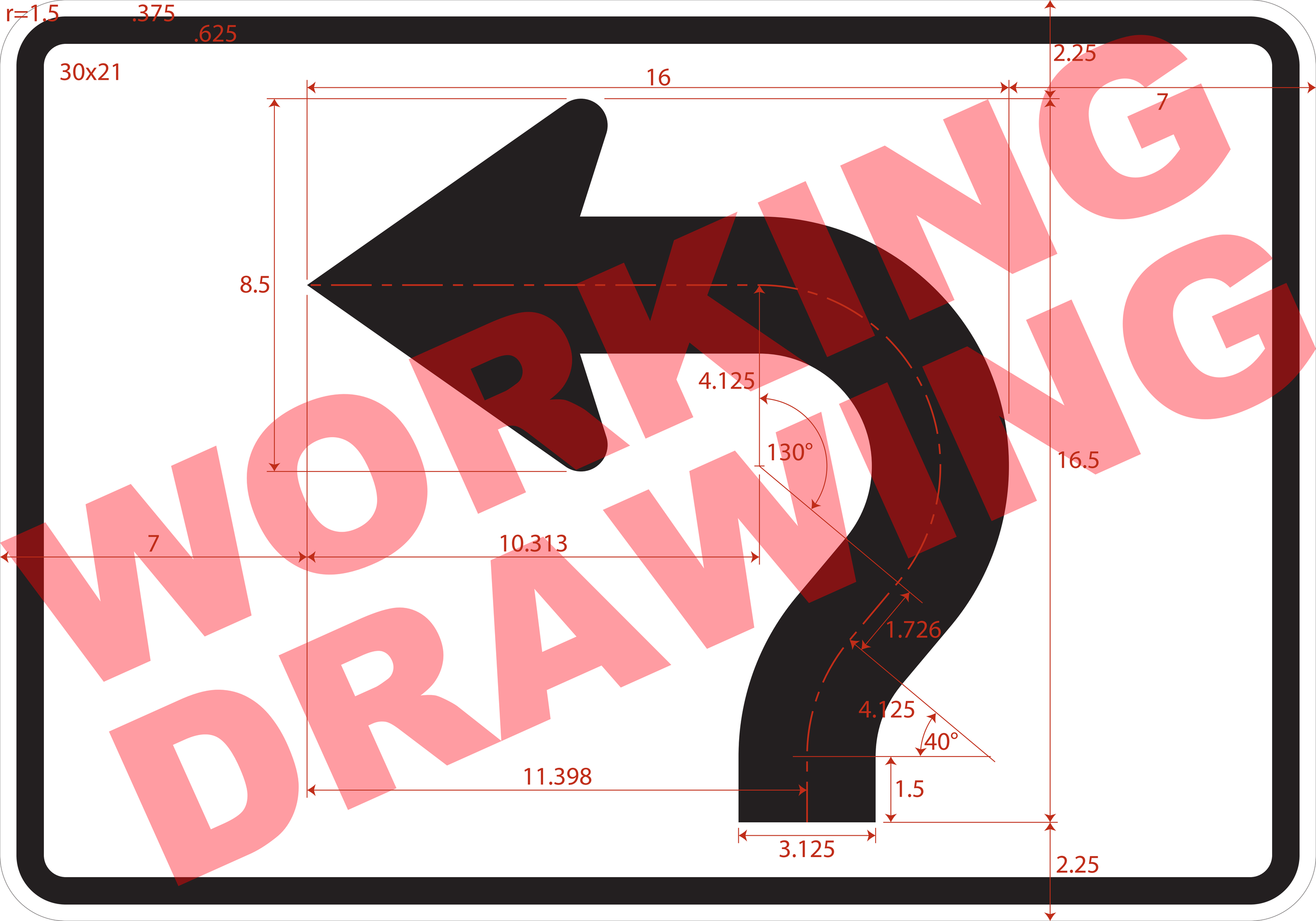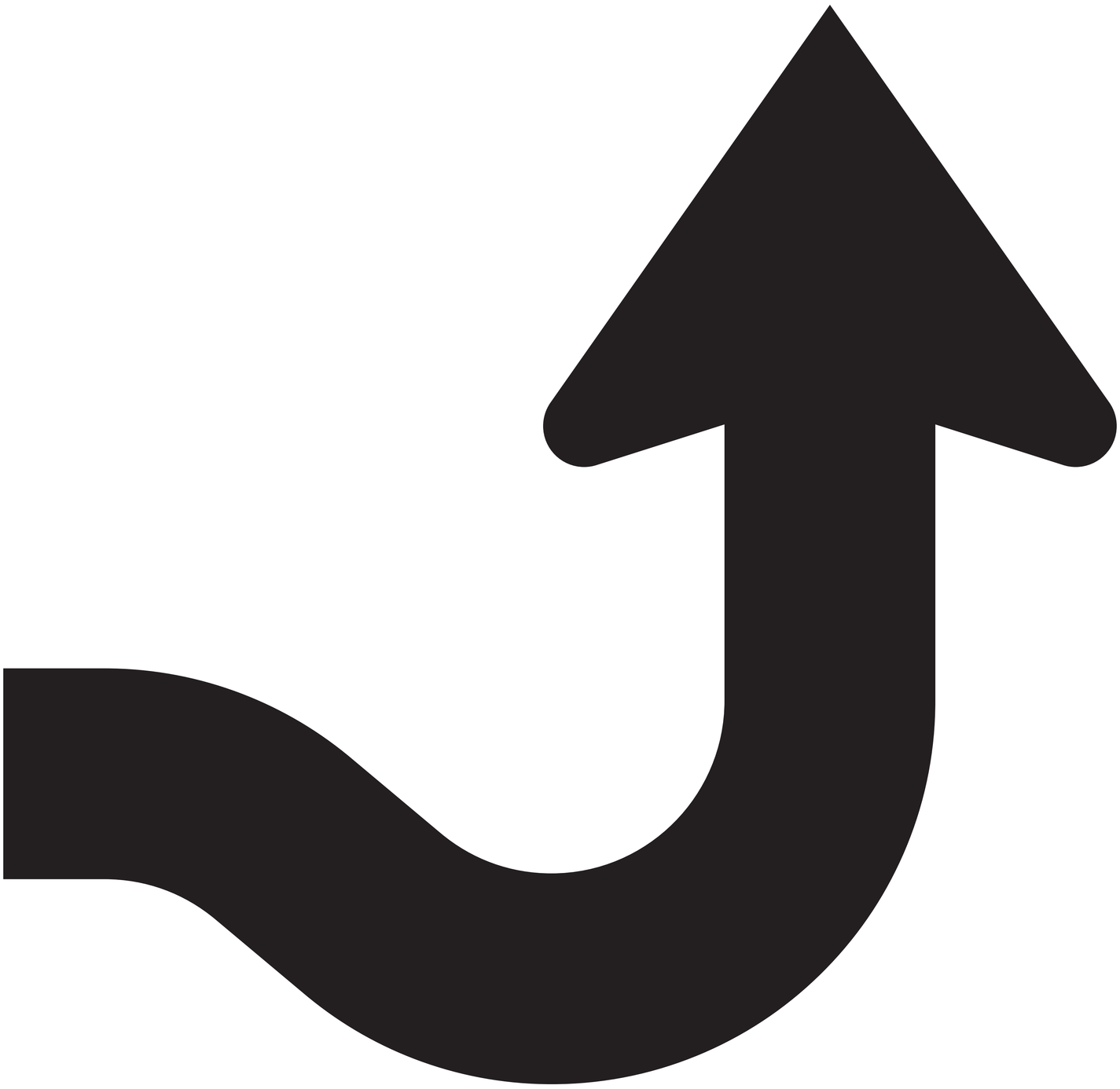
r=1.5
.375
.625
30x21
16
2.25
7
8.5
4.125
130°
16.5
7
10.313
1.726
4.125
40°
11.398
1.5
3.125
2.25
WORKING DRAWING